2nd Edition

Smart Sewage Solutions Pty Ltd

White Book

P O Box 3006
West Ipswich QLD 4305

Telephone: 5460 9111
Facsimile: 5460 9110

E-mail: smartsewagesolutions@bigpond.com

Krystel Kleer

CD Series

Secondary Treatment with your choice of UV or Chlorine Disinfection

Wastewater Treatment System

CD100
For up to 10 persons

CD6000
For up to 15 persons

Phosphate & Nutrient Reducing

Effluent & Wastewater Recycling

White Book

www.smartsewagesolutions.com.au

Smart Sewage Solutions Pty Ltd

ABN: 13 113 795 109

P O Box 3006
West Ipswich QLD 4305

Telephone: 5460 9111
Facsimile: 5460 9110

E-mail: smartsewagesolutions@bigpond.com
Web: www.smartsewagesolutions.com.au

A MEMBER OF THE Wastewater Practitioners Association

Introducing Smart Sewage Solutions Pty Limited. We are an innovative Australian company, providing a large range of quality water tanks and wastewater treatment system packages specifically designed to suit the needs of builders, plumbers and homeowners.

We believe we are unique in our industry, in the way we operate and our fundamental policies.

Educating the Home Owner

For instance, the issue of providing a "hand-over" to the home owners of wastewater treatment systems is one we take very seriously.

We believe in arming the home owner with the important and relevant information that users of a treatment system should know. In this way the owner becomes knowledgeable and can confidently and expertly manage the treatment system and irrigation area.

But most companies simply leave the home owner with an unimpressive leaflet and a wave after they've installed the treatment system, leaving them wondering how it all works and what they aren't or are supposed to do.

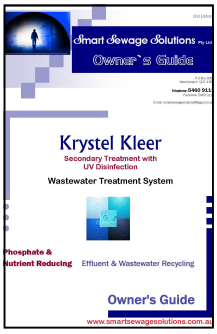

We are different. We take great pride in the fact that not only have we produced an informative *Owner's Guide* for our treatment systems, we also provide an *on-site handover* to each home owner. This is where we meet the owners at their new home, show them through the system, explain its correct operation and answer any further queries they might have.

And for those owners who find it inconvenient for an onsite demonstration, we invite them to telephone us for any assistance. In any event, the owner of each system is provided with our exclusive Owner's Guide.

Our dedication to providing necessary and valuable information applies also to our rainwater tanks (and in fact to all products we supply). We provide leaflets for the care and maintenance of our RW Series concrete water tanks, and similar information is provided for the poly tanks and water pumps.

All home owners are also invited to subscribe (free of charge) to our bi-monthly newsletter "WaterSmart". The subjects discussed are varied, including informative articles and topics of interest, with particular regard to water and wastewater.

These newsletters are emailed or posted not only to home owners, but also to SE Queensland councils, local government, builders, plumbers, geotechnical engineers, real estates, and others with an interest in the wastewater industry.

Krystel Kleer Wastewater Treatment Systems
Epsom
Quality Tanks Concrete Rainwater Tanks
Envirocycle Wastewater Treatment Systems
Duraplas
onga
Pentair

So what else do we do?

We enjoy a strong relationship with our customers, keeping in contact with them, listening to them and ensuring that the products we supply meet their needs.

We work closely not only with you, but also with your builder, plumber and local Council to make sure that your treatment system and/or rainwater tank is delivered and placed hassle-free! We've had years of experience in doing just that, and our knowledge of the rules and regulations governing this industry and our local Councils is extensive.

As **package specialists**, we have the advantage of offering:

- site inspections;
- concrete water tanks—inground and underground;
- poly water tanks—cylindrical; slimline; underground; wall tanks etc;
- water pumps—household pressure; constant pressure; multi-stage automatic; submersible;
- domestic and commercial wastewater treatment systems—aerobic/anaerobic; aerobic sand filter; nutrient reducing; ultra-violet disinfecting; advanced secondary treatment;
- land application areas, for example:
  - ✓ EPU (effluent polishing unit) comprising Onga LSF20 rapid sand filtration unit
  - ✓ heavy droplet sprinklers with fixed standposts
  - ✓ shallow subsurface irrigation
  - ✓ evapotranspiration beds
  - ✓ pressure compensating drip irrigation systems

- the delivery and placement of a package (treatment system and water tanks) on the same day;
- the excavation service, including bedding sand and water;
- personal hand-over to the home owner (exclusive to Smart Sewage Solutions);
- an informative owner's guide for each treatment system (produced by Smart Sewage Solutions);
- the first year's maintenance service is provided for all treatment systems, with the option to renew the maintenance agreement for the second year .

You can be assured that it is our continuing commitment to provide excellent customer service, supported by our extensive experience in the wastewater industry, the quality of the products and services we provide, and our ongoing membership and Vice Presidency of the Qld Wastewater Practitioners Association.

Best Regards

Wastewater FAQs—Krystel Kleer

What is the difference between a septic and Krystel Kleer systems?

Septic tanks use old technology utilising underground trenches. They are heavily reliant on good quality topsoil to allow the wastewater to percolate through the soil. In Australia, the soils are mainly weathered over the last 360 million years, and it is difficult to find reasonable quality topsoil over the entire length of the required trenches. Septic tank trenches can pollute ground water supplies and can leak onto lawns with infectious, smelly discharge. This has the potential to cause serious illness, particularly in children and the elderly or infirm.

The **Krystel Kleer** system uses either an **ultra-violet or chlorine** process to ensure complete disinfection of coliforming and other noxious bacteria and viruses. Further, nutrient concentrations (eg phosphates, nitrates) are reduced by 75%.

So efficient is the **Krystel Kleer** purification technique that under normal operating conditions, the results produce clean and clear odourless water that is ideal for re-use in irrigating the garden automatically either via surface irrigation or through shallow subsurface irrigation.

What is the average daily power usage?

Electrical consultants advise that the annual usage of electricity for the system is similar to an average household refrigerator. Some aerobic systems on the market turn the air blower off for part of the day, but because bacteria in all aerobic systems need oxygen to digest the waste, **Krystel Kleer** systems operate with the blower functioning 24 hours a day (unless in de-nitrification mode), which means that the wastewater is being treated at all times.

What are the ongoing costs?

Servicing is carried out every 3 months and is provided free of charge for the first year. After that, there are several servicing packages available.

What warranty is offered on the treatment plant?

There is a 1 year manufacturer's warranty on the air and irrigation pumps.

The system's alarm panel, control box and UV light are covered by a 1 year manufacturer's warranty.

All fittings, pipe work, fixings and filter media carry a 15 year warranty.

The vessel (the concrete tank) and concrete internal baffles carry a 15 year warranty.

How will the wastewater be disposed of?

The wastewater has been treated and disinfected and will be disposed of via your "land application area". This area could be above-ground heavy droplet sprinklers, or subsurface irrigation, or various other methods, and will be decided between your local Council and (in most instances) a geotechnical engineer.

Smart Sewage Solutions and its subcontractors will construct the disposal area in accordance with the geotechnical report approved by your council.

Are installations allowed on sewered blocks?

No. Treatment systems can only be installed in areas where reticulated sewerage disposal is not provided

Will the system smell?

No. Odours emanating from a treatment system are caused by bacteria that have died. Reasons for this range from lack of air (the blower has been turned off for a number of hours) to chemical pollution, so under normal household operating conditions there is no smell emanating from the **Krystel Kleer**.

Will I receive information about the system once it is installed?

Absolutely. Exclusive to Smart Sewage Solutions is our "hand over"—we take the time to arrange to meet you at your new home, introduce you to your treatment system, explain its correct operation, provide you with our informative Owner's Guide and answer any queries you might have.

What happens to solids in the system?

Solids represent approximately 0.1% of household wastewater, which the systems continually reprocess until it forms a layer of residual ("sludge"). After a number of years the accumulated sludge will need to be removed from the system. Your service technician will advise you when de-sludging is required.

Do I have to do any maintenance to the system?

Your service provider will provide all the maintenance requirements for the system, leaving you free to enjoy your lifestyle. However, you are required to ensure the irrigation area is free of weeds and debris at all times. Full information on this is contained in our Owner's Guide. Your service technician will also assist you as much as possible .

Can I locate the tank away from my house?

Yes, provided the correct fall can be achieved (sometimes with the use of riser rings), generally speaking the tank can be located where you choose.

What happens in a power failure?

The treatment system will stop, along with all your electrical appliances. However, no harm will occur to the system. When the power is reconnected, the system alarm should clear itself within 12 hours. If not, simply reset the tripped circuit breaker. The sludge return will then recycle any dead bacteria that cause the offensive odours common with other treatment systems.

How much noise comes from the system?

The **Krystel Kleer** is designed to be quiet and unobtrusive. Standing next to it, you probably wouldn't hear the air blower humming unless you bent down and put your ear to the cover box. If the irrigation pump was running, you would hardly hear it from half a metre away.

What do I do with the system when I go on holiday?

Nothing at all; it will keep on quietly working while you're away. But for security reasons we suggest you turn your alarm to "Mute", and upon your return turn it back to the "On" position.

What shouldn't I dispose of down the toilet or drains?

Solid objects travelling through the system can cause blockages, and generally they do just that. Also large quantities of strong disinfectants, anti-bacterial products, turps etc are detrimental to the health of the bacteria living within your system.

Contents

Page

The Krystel Kleer system 1
Why choose a Krystel Kleer system? 1
The best system for your health 1
Krystel Kleer makes sense because 1

The Krystel Kleer CD systems 2
What is an Krystel Kleer CD sysem? 2
What is Ultra-Violet disinfection? 2

The Krystel Kleer process 3
Primary and Secondary treatment 3
Nitrate/Nutrient Reducing 3

Excavation, delivery & placement 4
Tank dimensions 4
Safety 4
Excavation and backfilling 4
Filling with water 4
Delivery and placement 5
Positioning 5
Important notes 5

The land application area 6
Typical Council set-back distances 6
Suitable plants 7

Maintenance 8
Maintenance programme 8
Home owner requirements 8
Maintenance agreement renewal 8

Warranties 9
Service life 9

General Information 10

Electrical circuit specifications 11

The Krystel Kleer systems

The ***Krystel Kleer*** systems offer the most advanced solutions to the challenge of wastewater treatment.

Why choose a Krystel Kleer system?

In the specialist and serious business of wastewater treatment and its disposal, where the health and lifestyle of individuals and families are of concern, it is comforting to know that ***Krystel Kleer***:

- is one of the most advanced treatment systems available in Australia;
- has tanks and internal compartments made of concrete, ensuring greater strength and durability;
- is supported by a highly experienced and qualified team, and highly trained tradespeople;
- has specialised equipment and skilled personnel for the maintenance of the systems;
- uses proven, long-lasting quality components.

The Best System for your Health

Krystel Kleer systems treat wastewater to a level of purity unattainable by conventional septic systems. We have overcomes the problems of septics ... with no overflow, no seepage and no environmental disadvantages such as untreated sewerage being put back into our streets, rivers or the oceans. And just as importantly, **NO SMELL**.

A Krystel Kleer system makes sense because . . .

- it conserves water for automatic re-use in the garden
- it minimises excess water rates
- it does not pollute the environment
- it is an efficient and clean way to dispose of all domestic wastewater
- it eliminates transpiration bed requirements—you can make better use of your property
- it is an inexpensive alternative to septic and pump-out systems
- there are domestic, commercial and public systems available
- it is fully automatic
- it provides you with peace of mind
- a complete maintenance service programme is available after the complimentary first year
- it adds value to your property
- it saves time and money in watering areas of your property (as per local authority approval)

The Krystel Kleer CD Series

What is a Krystel Kleer CD Series?

The *Krystel Kleer CD Series are* some of the most advanced aerated wastewater treatment systems in the world. Their *disinfection process* reduces the bacteria levels to a point where the wastewater could one day be re-used for toilet flushing within your household!

The *CD100* system caters for up to 10 persons; the *CD6000* system caters for up to 15 persons.

Developed in Australia by Australians, the *Krystel Kleer CD Series* systems take your household waste from the toilet, bathroom, kitchen and laundry and then treats it to a level of purity called *secondary treatment*.

Complete disinfection of coliforms, noxious bacteria and viruses is achieved using the system's *ultra-violet or chlorine disinfection process*.

To achieve its classification as a *secondary treatment* system, the *Krystel Kleer CD Series* underwent rigorous testing and consistently produced effluent that meets the high standard required by Building Codes Australia.

Not only is the system superior in its reduction of bacteria, it is more environmentally friendly by removing a high proportion of nitrogen in the treated effluent. ***In fact, the quality of the effluent is such that it will assist the home owner by reducing the size of costly irrigation areas***.

What is Ultra-violet Disinfection?

Ultra-violet light is a particular selection of wavelengths from the light spectrum that occurs naturally in sunlight. It damages the DNA molecules in bacteria, viruses and other micro-organisms, preventing them from replicating and surviving to cause harm. Some typical micro-organisms destroyed by ultra-violet disinfection include cholera, dysentery, hepatitis, typhoid and E-Coli.

UV Tube

If the UV model is selected, then during the disinfection process water passes through a field of concentrated short-wave ultra-violet energy thousands of times more powerful than sunlight. Any living micro-organisms are quickly destroyed, providing clean healthy water.

The Krystel Kleer CD Series are best for your health and the environment!

The Krystel Kleer CD Process

The ***Krystel Kleer*** method for the treatment of sewage and sullage from your home is based on the age-old principle of separating the solids from the liquids, allowing anaerobic bacteria (they do not require oxygen to be present) and aerobic bacteria (they do require oxygen) to digest the waste.

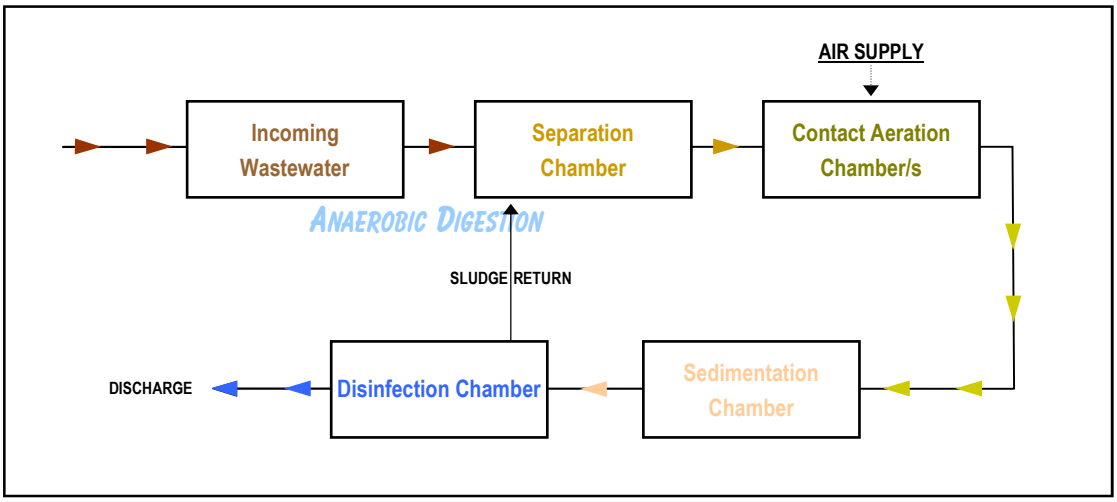

Primary Treatment

The first stage of treatment is to separate the solids from the liquids. The solids (mainly toilet wastes) remain in the first compartment where a digestion process takes place. The digestion is accelerated by the presence of anaerobic micro-organisms that multiply rapidly under ideal conditions and ensure that the offensive faecal solids are turned into an inert waste.

Secondary Treatment

Aeration

The subsequent treatment stages are mainly concerned with the aeration of the liquid wastes. Once again, microbes present in these liquids are used to assist in the aeration process. The micro-organisms are called aerobes and will thrive and multiply in the presence of oxygen, so it is important that a constant air supply is being maintained at all times. The air is supplied from an air pump attached to the system.

Clarification

Following aeration, the liquid wastes are allowed to settle under quiescent conditions. Any solid particles suspended in the aerated effluent will settle out and are returned automatically to the first or second treatment stage. Although it looks reasonably clean, the clarified water may still contain pathogens which will have to be removed.

Further Secondary Treatment

Disinfection

The bacteria are removed by your choice of either the *ultra-violet or chlorine process* while in the disinfection chamber, ensuring *complete disinfection*.

Nutrient Removal

The aerated, clarified and disinfected water contains natural nutrients such as phosphates and nitrates, which can pose a problem in certain conditions. The *Krystel Kleer* reduces the nutrient concentration, limiting potential damage to the surrounding landscape and waterways.

Excavation, Delivery & Placement

Tank Dimensions

Electric box height 0.42m

Outside diameter 2.48m

Overall height 2.11m

Invert (from tank bottom 1.637m
to bottom of inlet pipe)

Safety

Except for the persons responsible for lifting and positioning the tank in the excavation, there must not be any person within 20m of the installation site during the lifting and positioning.

Excavation and Backfilling

Our quotations include this service, unless you have otherwise requested to provide the excavation yourself. In either circumstance, the following directions and recommendations are to be followed:

- Site preparation drawings show excavation walls to be perpendicular. However, depending on soil conditions, the excavator may need to angle or retain the side walls such that they don't cave in during installation.
- Sand or excavated material/spoil with maximum particle size of 50mm is used.
- The base of the septic tank is to be placed on a 100mm levelled layer of bedding sand or 5ml aggregate.
- Ensure that sand or excavated material does not fall on the lid of the tank, as this will fall into the system through the manholes and clog the system and irrigation pump.
- Following placement, the loose backfill material must be kept at least 70mm below the surface of the tank lid.

The excavation is to be sited on flat ground, and dug to the following dimensions:

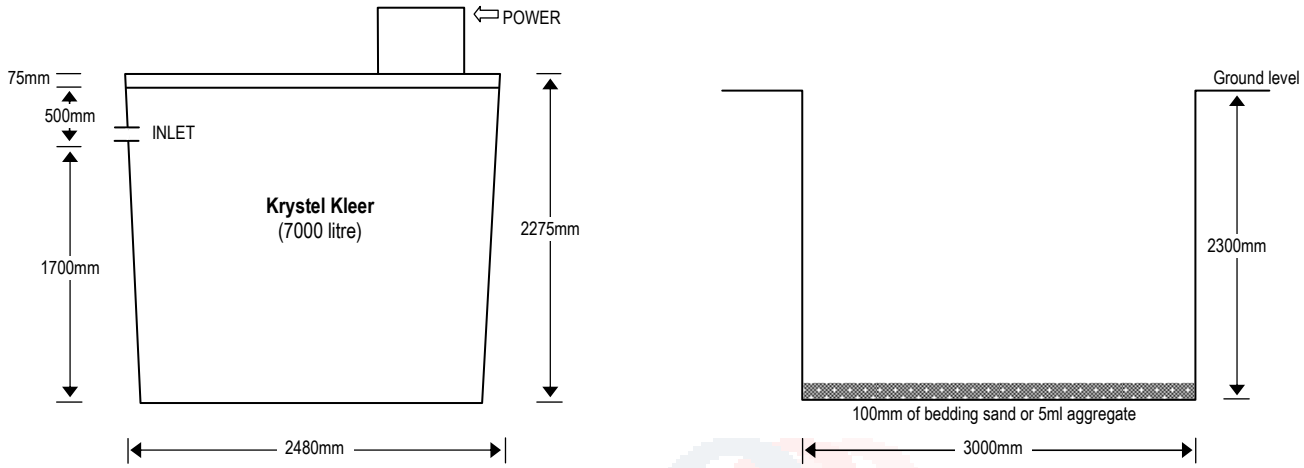

Filling with Water

- After backfilling, the tank must be filled with 5300 litres in the primary chamber (first chamber) ensuring that the tank's separate compartments are raised equally at no more than 600mm increments.
- If the tank is not filled with water, it could hydraulically lift out of the ground during wet conditions.
- If our quotation does not include the excavation service, then it is the responsibility of the customer to ensure that the tank is filled with water after backfilling. We will not accept any responsibility if this action is not carried out.
- Water is also required in the system in order to be commissioned for use.
- Potable water must be used.

NOTE: Do not act solely on the basis of the material contained in this leaflet. Items herein are general comments only and do not convey advice per se. We therefore recommend that our formal advice be sought before acting in any of these areas.

Delivery & Placement

In most areas the tank will be delivered by a truck equipped with a crane located at the rear of the vehicle. Such a vehicle will back up to the tank site, then lift and slew the tank into position behind the vehicle before placing the tank into the prepared excavation (yours or ours). The maximum reach from the rear of the vehicle is 3m to the centre of the tank.

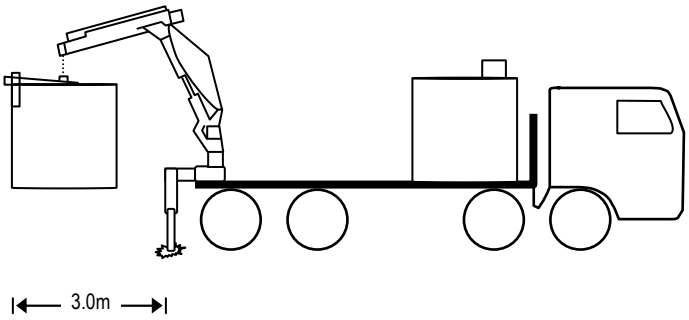

Make sure the truck has access to your site and observe the following requirements:

- 4.8m needed to pass under trees and power lines
- 3.0m needed between gateposts
- Site conditions should be dry and stable under foot

To enable the tank to be unloaded, a distance of 6m in diameter around the truck will be required. This will also allow enough distance for the crane's outriggers (legs).

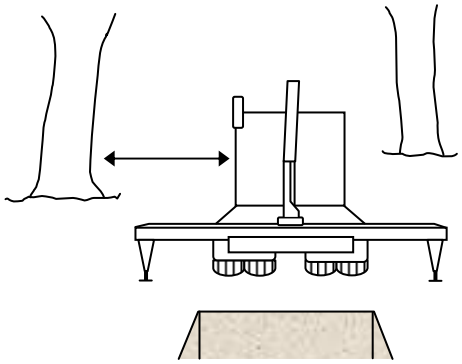

This diagram also applies for right-hand side unloading.

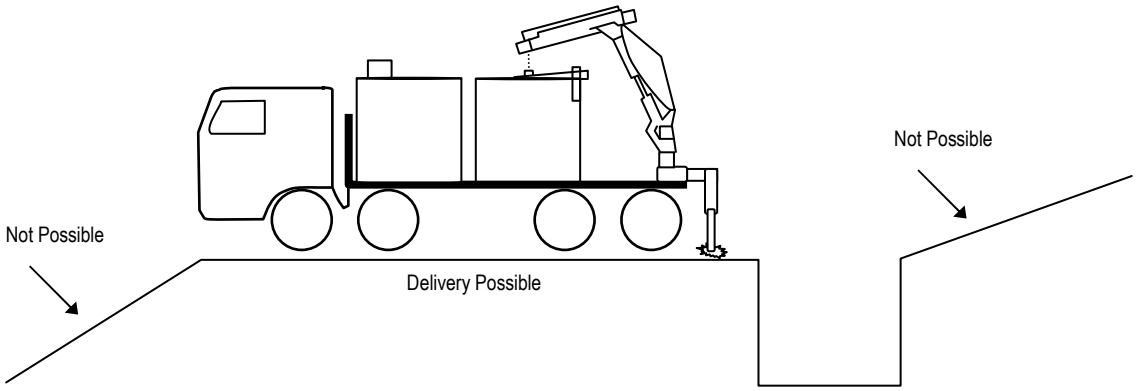

Positioning

Tank must be level in both inflow/outflow direction and 90deg to the inflow/outflow direction (<1deg deviation).

Important Notes

- Tanks will not be lifted over houses, sheds or other property of value, nor will they be lifted under low power lines.
- Tank sites that are cut out of sloping hills will require an adequate flat area for the truck to unload. Unloading on awkward and dangerous sites will be at the driver's discretion.
- Safe and clear access is the total responsibility of the customer.

NOTE: Do not act solely on the basis of the material contained in this leaflet. Items herein are general comments only and do not convey advice per se. We therefore recommend that our formal advice be sought before acting in any of these areas.

The Land Application Area

Most councils require a Geotechnical Engineer Report (Site & Soil Evaluation) to be carried out prior to lodging an application to install a wastewater treatment system.

Smart Sewage Solutions Pty Ltd and its subcontractors construct the irrigation system in accordance with the geotechnical report approved by your local council. Upon completion, the geotechnical engineer and local council confirm that the irrigation system has been constructed as per the approved report. The irrigation area is then tested upon commissioning the system for use.

The treated water is dispersed through irrigation lines, using the method directed by the geotechnical report. Methods of dispersal vary between local councils, ranging from above-ground heavy droplet sprinklers to pressure-compensating drippers, shallow subsurface irrigation and evapotranspiration beds.

In these ways nutrients are returned to nature via lawns and gardens. This also ensures that the area designated as your irrigation area receives the benefit of regular watering, is sustainable and environmentally balanced, and the health and welfare of the occupants and the public at large is protected (as per local authority approval).

Typical Council Set-Back Distances for the Krystel Kleer CD-UV Series

Land application disposal method	Recommended Buffer Distances
All land application disposal methods	**Permanent surface water** (river, stream etc) **Domestic groundwater well** **Any other water** (farm dams, drainage channels etc) 10 metres
Surface spray irrigation	**Driveways and property boundaries** 4 metres if disposal area is up-gradient 2 metres if disposal area is down-gradient **Dwellings** 10 metres **Swimming pools** 6 metres **Paths and walkways** 2 metres
Surface drip and trickle irrigation	**Driveways, property boundaries, dwellings, swimming pools** 4 metres if disposal area up-gradient 3 metres if disposal area down-gradient
Subsurface irrigation	**Driveways, property boundaries, dwellings, swimming pools** 4 metres if disposal area is up-gradient 3 metres if disposal area is down-gradient
Absorption system	**Property boundaries** 4 metres if disposal area is up-gradient 4 metres if disposal area is down-gradient **Driveways, dwellings, swimming pools** 6 metres if disposal area is up-gradient 4 metres if disposal area is down-gradient

Some Suitable Plants for your Land Application Area

This list is only intended to provide a selection of trees, shrubs and other plants that may be considered suitable for your treatment system's surface irrigation disposal area.

Due to the wide-ranging climate and soil variations we experience in Queensland, we strongly recommend that you make further enquiries with your local plant nursery before finalising your plant choice.

Botanical Name	Common Name	Approx Height
Climbers		
Bougainvillea spp.		
Hardenbergia violacea	Purple Coral Pea	
Hibbertia scandens	Snake Vine	
Jasminum officinate	Common Jasmine	
Jasminum Grandiflorum		
Kennedia rubicunda	Dusky Coral Pea	
Lonicera japonica	Japanese Honeysuckle	
Passiflora spp.		
Vitis coignetiae	Glory Vine	
Pandorea jasminoides		

Botanical Name	Common Name	Approx Height
Perennials		
Aster novi-beigii	Perennial Aster	
Canna		
Chrysanthemum frutescens	Marguerite Daisy	
Chrysanthemum maximum	Shasta Daisy	
Gazania rigens	Black-eyed Susan	
Salvia uliginosa	Bog Salvia	

Botanical Name	Common Name	Approx Height
Trees		
Agonis flexuosa	Willow Myrtle	5-6m
Acacia baileyana	Cootamundra Wattle	3-6m
Banksia spp.		
Casuarina glauca	Swamp Oak	6-12m
Casuarina stricta	Drooping Sheoake	3-5m
Casuarina cunninghamiana	River Sheoake	6-10m
Callistemon viminalis	Red Bottlebrush	3-6m
Callistemon salignus	White Bottlebrush	3-6m
Eucalyptus grandis	Flooded Gum	10-15m
Eucalyptus camaldulenisis	River Red Gum	15-20m
Eucalyptus cosmophylla	Cup Gum	5-6m
Hakea spp.		
Hymenosporum flavem	Native Frangipani	3-6m
Leptosporum laevigatum	Coast Tea Tree	5-6m
Melaleuca armillaris	Bracelet Honey Myrtle	3-4m
Melaleuca quinquenervia	Broad Paperbark	5-7m
Melaleuca nesphila	Western Tea Myrtle	2-4m
Syzgium paniculatum	Bush Cherry	8-10m
Tristania laurina	Kanuka	3-5m

Botanical Name	Common Name	Approx Height
Shrubs		
Abelia x grandiflow	Abelia	-23m
Acacia floribunda	Gossamer Wattle	2-4m
Acacia longifolia	Sallow Wattle	2-4m
Acacia iteaphylla		
Alocasia Purpurea		
Chamelaucium uncinatum	Geraldton Wax	2-4m
Clerodendrum heterphylla		
Cotoneaster spp.		
Cortaderia selloana	Pampas Grass	2-3m
Cupha ignea		
Cuphea micropetala		
Cyperus alternifolius	Umbrella Grass	0.5-1m
Cyperus papyrus	Papyrus	
Hebe spp.	Veronia	0.5-1m
Iris pseudacorus	Yellow Flag Iris	0.5-1m
Melaleuca decussata	Cross Leaf Honey Myrtle	1-2m
Nerium oleander	Oleander	2-3m
Phormium tenax	New Zealand Flax	2-2.5m

Maintenance of the Krystel Kleer CD Series

All sewage treatment systems require regular maintenance to ensure that the effluent quality consistently meets the standards set by the regulating authority. To ensure that your ***Krystel Kleer*** sewage treatment plant performs to the highest standards, a maintenance program is stipulated by your local authority in the interests of environmental health and safety. Failure to have these stipulated services carried out could result in a breach of public health legislation and subsequent legal proceedings.

Once your ***Krystel Kleer*** system is installed, you are assured of total peace of mind. The *Krystel Kleer CD Series* have been approved for 4 services per year. ***Krystel Kleer*** technicians will check, service and maintain your system under your complimentary first year service contract, and emergency after-hours attendances are simply a telephone call away.

Apart from general maintenance, various water quality tests are conducted onsite and inspection records are kept. Reports are sent to regulating bodies in order to comply with their conditions of approval.

Quarterly Servicing

The following information covering the requirements and maintenance for the first, second and subsequent years of operation is provided for your guidance. At each service, your ***Krystel Kleer*** technician will:

- make any necessary adjustments to the air intake
- make any necessary adjustments to the sludge return
- clean the plant (if necessary)
- test and replenish the purifiers
- check and report on sludge levels
- clean the UV disinfecting light (if applicable)
- perform onsite tests of water quality
- report to your local council and yourself as directed
- complete a service and maintenance check of the blower, irrigation pump, UV light (if applicable) and electrical systems, including the alarms

Home Owner Requirements

The owner of the plant (you) will be licensed by your local Council and will be entirely responsible for the operation and maintenance of the plant. The existence of a service contract does not transfer the responsibility from the owner to the supplier or service provider.

Ensure the warning signs are clearly visible by maintaining your land application area free from weeds and debris.

Regular visual checking of your ***Krystel Kleer*** system's exterior and irrigation system will ensure that most problems are located and fixed early.

The visual signs of the land application system failure include:

- surface ponding or run-off of treated wastewater
- soil quality deterioration
- poor vegetation growth
- unusual odours

Maintenance Agreement Renewal

An offer to renew the maintenance program will be provided at the expiration of each annual contract and will remain open for 30 days only. Legislation requires that all treatment plant service providers must notify your local council by mail if your contract is not renewed within those 30 days.

Warranties covering the Krystel Kleer CD Series

Structure	Warranty	Minimum Service Life
Concrete Tank	15 years	20 years
Internal Baffles (concrete)	15 years	20 years
Fittings		
Pipework (PVC etc)	15 years	20 years
Fixing (Stainless etc)	15 years	20 years
Filter Media	15 years	20 years
Electrical Components		
Control Box	2 years *	5 years
Alarm Panel	2 years *	5 years
Irrigation Pump	2 years *	5 years
Aeration Pump	2 years *	5 years
UV Disinfecting Light (if applicable)	2 years *	5 years

Warranties

* 12 month standard warranty and a further 12 month extended warranty if you renew your first year maintenance agreement with a Krystel Kleer approved service provider.

The warranty covering the aeration pump begins when the system is commissioned for use or the pump is delivered, whichever occurs first.

All other warranties covering the treatment system begin on the date the system is delivered to your property.

Service life

All mechanical and electrical parts have a minimum service life of 5 years.

“Service life” is the time for mechanical and electrical parts to operate before breakdown or failure can reasonably be expected.

General Information

Responsibility

You need to be aware that the owner of the treatment plant (you) will be licensed by the local authority and will be held entirely responsible for the operation and maintenance of the plant, regardless of the existence of a maintenance agreement. Our exclusive **handover** and **owner's guide** are valuable tools in your operational training. It's not rocket science, but you might find that a little bit of training and advice in the early days could be very beneficial.

Electricity Consumption

Electrical consultants have advised that the annual usage of electricity for the total ***Krystel Kleer*** system is similar to an average household refrigerator.

De-Sludging

All treatment plants accumulate sludge, despite advertising material to the contrary by some other companies. Sludge is the matter going down the drains that is not organic, for instance sand from the beach brought home in swimming apparel, towels, clothes etc.

Dependent on individual household usage, it will be necessary to periodically remove the contents of the septic tank/ compartment. Your service technician will advise you when de-sludging is required, but it is your (the homeowner's) responsibility to organise the service.

De-sludging may be carried out by any person or organisation approved by the Health Department. Australian Standard AS/NZS 1546.recommends de-sludging at intervals of 3-5 years for optimum performance.

Run-off

Currently legislation states that generally speaking, everything produced on the property must be contained within the property, including treated effluent, stormwater, run-off, smells, odours etc.

You are not permitted to water the Council's footpath and care should be taken not to allow any run-off onto your neighbour's land.

Please leave diversion/retention mounds in place.

Maintenance

It is the owner's responsibility to ensure that the irrigation area/s are maintained at all times. Your service technician will assist you as much as possible in this regard. (Note—as required by law, a report on the condition of the irrigation area is included in your quarterly maintenance report and will be forwarded to your local Council.)

Access

For maintenance purposes, FREE access is required to ALL manholes on the tank/s and to the ELECTRIC BOX. This is a requirement of the regulating authority.

Consider locating your ***Krystel Kleer*** in an area that can be secured from family pets etc. for maintenance servicing attendances, with power and water services located nearby.

Help protect your health and our precious environment . . .

Poorly maintained land application areas are a serious source of water pollution and may present health risks, cause odours and attract vermin and insects. By looking after your sewage management system, you can do your in helping to protect the environment and the health of you and your family.

Use Environmentally Friendly Products!

Electrical Circuit Specifications—For Information Only

(Attention Home Owner : this page will be supplied to you separately to give to your Electrician.)

Caution : This specification changes from time to time. Always check first. If in doubt, ASK.

Note: Electrical work must be carried out in accordance with AS/NZ3000 and Supply Authority Rules.
A "Notification of electrical work" certificate must be lodged with the Supply Authority for your wiring.

Important—Conduit Sealing

The conduit must be run to the junction box mounted in the side of the control box on the treatment tank. **Ensure that you glue all the joints in the conduit run** to prevent moisture from entering the Krystel Kleer control box via your conduit and causing damage. Moisture ingress is not covered by the manufacturer's guarantee and will be charged to the purchaser.

Circuit

A dedicated single phase plus earth circuit is to be used, protected by a 16 amp MINIMUM circuit breaker of 8Ka type suitable for motor start (such as Weber/Martec AS168 type, Quicklage, Teresaki Safe "T" or Clipsal "U" type), minimum cable size 2.5mm, connected to and run from an EXTERNAL building switchboard (to allow for maintenance when the house is unattended) to the **Krystel Kleer** terminal box. Alarm wiring run can be two-core switch wire.

Circuit should be labelled "Krystel Kleer System" and must be connected to the terminals as labelled in the **Krystel Kleer** terminal box.

Current/Amps

Continuous running current is 0.6amp with maximum intermittent current up to 3.1 amps (dependent upon submersible pump size).

Alarm

The alarm may sound upon initial energising of the circuit to the system. This may be caused by a high water level and is no cause for concern. If the power is left on, the water level will return to normal within 30 minutes and the alarm will automatically reset. Be sure to return the alarm to "NORMAL" after the alarm has reset.

Alarm Panel

If the alarm panel is more than 30 meters away from the Krystel Kleer control box, use shielded cable for **SW to alarm panel** to avoid any induced voltage from active cable.

Fault Conditions: **Blue** light and buzzer = high water **White** light and buzzer = low air pressure

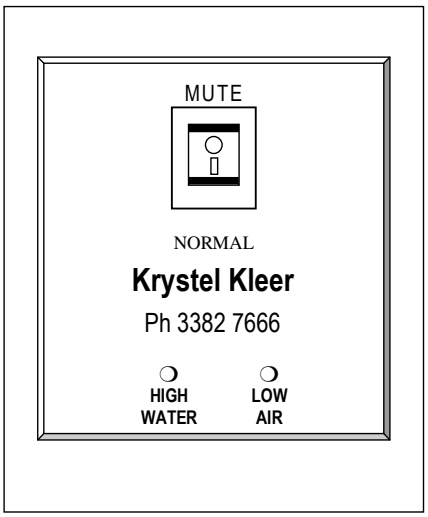

ALARM PANEL

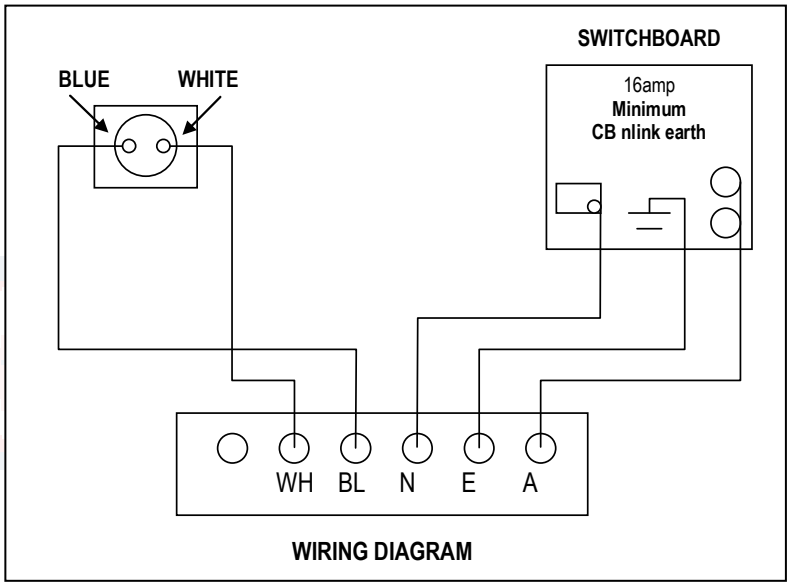

WIRING DIAGRAM

Smart Sewage Solutions Pty Ltd

P O Box 3006
West Ipswich QLD 4305
Telephone: 5460 9111
Facsimile: 5460 9110
E-mail: smartsewagesolutions@bigpond.com
Web: www.smartsewagesolutions.com.au

A MEMBER OF THE Wastewater Practitioners Association

Package Specialists

PROUDLY UTILISING INNOVATIVE PRODUCTS AND SERVICES, INCLUDING:

Krystel Kleer Wastewater Treatment Systems

Epsom

Duraplas

EnviroCycle Wastewater Treatment Systems

Quality Tanks Concrete Rainwater Tanks

onga Pentair

Contact us for a competitive price!

- **Domestic sewage treatment plants** We are experts within our industry and local council areas
- **Concrete pre-cast water tanks** 5000*l* to 45,460*l*. *Inground and UNDERGROUND.*
- **Polyethylene tanks** Our range includes slimline, squat, tower and cylindrical (round)
- **Water pumps** Jet-assisted household pressure; constant pressure; submersible; multi-stage automatic
- **Effluent polishing units** Some councils require this attachment on all treatment systems in their Shire

Telephone (07) 5460 9111